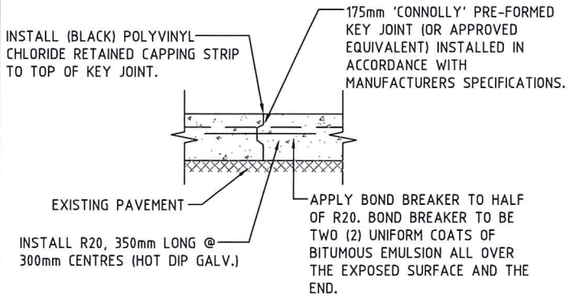

CONSTRUCTION JOINT DETAIL (CJ)

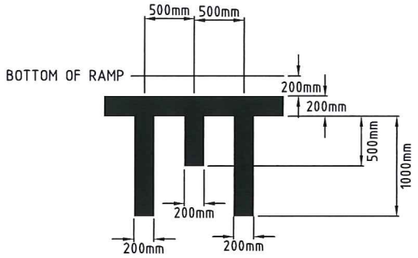

PAVEMENT MARKING FOR ROAD HUMPS

COLOUR: YELLOW ON LIGHT GREY CONCRETE
OR WHITE ON DARK COLOURED CONCRETE

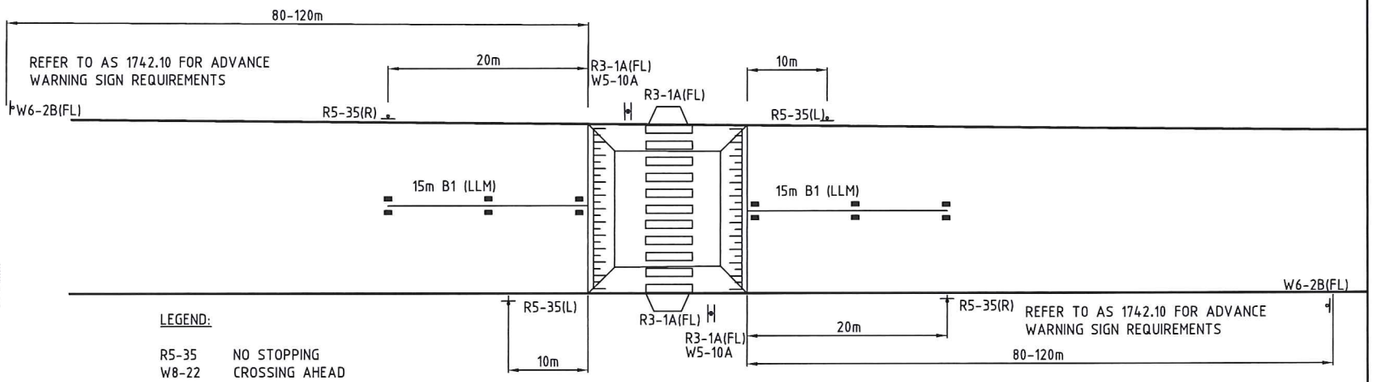

LEGEND:

R5-35	NO STOPPING
W8-22	CROSSING AHEAD
W5-10	ROAD HUMP
W6-2(FL)	PEDESTRIAN CROSSING AHEAD
W6-1(FL)	PEDESTRIANS
R3-1(FL)	PEDESTRIAN CROSSING

TRAFFIC CONTROL DEVICES

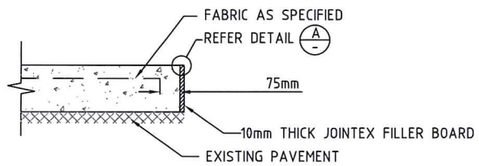

EXPANSION JOINT DETAIL (EJ)

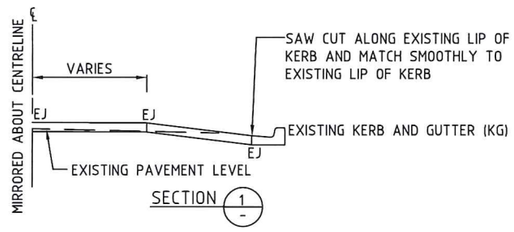

SECTION 1

NOTES

1. PLATFORMS ARE TO BE GRADED TO MATCH CROSS FALLS OF VERTICAL AND HORIZONTAL GEOMETRY.
2. NO TRAFFIC SHALL BE PERMITTED ONTO CONCRETE WORKS UNTIL A MINIMUM COMPRESSIVE STRENGTH OF 15 MPa HAS BEEN ACHIEVED. CONTRACTOR TO TAKE AIR CURED TEST CYLINDERS AND PROVIDE COMPRESSIVE STRENGTH CERTIFICATE(S) PRIOR TO OPENING TO TRAFFIC.
3. ON NEW ROADS (UNLESS APPROVED BY THE ROAD AUTHORITY) THE PLATFORM SHALL NOT HAVE SIDE SLOPES SO THAT PEDESTRIANS CAN CROSS THE PLATFORM ON AN EVEN GRADIENT. ADEQUATE STORMWATER DRAINAGE SHALL BE PROVIDED. IN AREAS OF FLUSH KERB PROVIDE BOLLARDS TO PREVENT VEHCULAR ACCESS ONTO THE VERGE.
4. FOR PLATFORMS TO BE CONSTRUCTED IN EXISTING ROADS THE DESIGNER SHALL ENSURE THAT THE GRADE DIFFERENCE BETWEEN THE PLATFORM SIDE SLOPE AND PRAM CROSSING SLOPE DOES NOT EXCEED THE MAXIMUM GRADE DIFFERENTIAL (REFER AS1428.1)
5. THE CONTRACTOR IS TO SAWCUT AND REMOVE THE EXISTING ASPHALTIC CONCRETE TO PRECISE LOCATION. EXCAVATE THE EXISTING GRAVEL BASE MATERIAL TO SUIT THE CONCRETE DEPTH AND RE-COMPACT TO 100% MAXIMUM MODIFIED DRY DENSITY ALL AREAS UNDER THE NEW RAISED PAVEMENT PLATFORMS.
6. EXISTING HYDRAULIC SERVICES HAVE NOT BEEN PLOTTED. IT IS THE RESPONSIBILITY OF THE CONTRACTOR TO ESTABLISH THE LOCATION AND LEVEL OF ALL EXISTING SERVICES PRIOR TO THE COMMENCEMENT OF WORK. CLEARANCES SHALL BE OBTAINED BY THE CONTRACTOR FROM THE RELEVANT SERVICE AUTHORITY.
7. THE GRADES SHOWN ARE BASED ON A ROAD THAT HAS A LONGITUDINAL GRADIENT AND CROSSFALL OF 0%. PLATFORM RAMP GRADES WILL VARY DEPENDING ON THE EXISTING PAVEMENT GRADES AND CROSSFALLS (REFER AS1742.13 APPENDIX C AND AUSTROADS GTM PART 8) APPROVAL FROM THE ROAD AUTHORITY SHALL BE SOUGHT WHERE GRADES EXCEED THE AUSTRALIAN STD REQUIREMENT.
8. RAISED PLATFORM TO BE 175mm (min) THICK 32mPa CONCRETE (100mm ABOVE EXISTING PAVEMENT LEVEL) REINFORCED WITH SL92 MESH WITH 50mm TOP COVER. CONCRETE SHALL BE BATCH MIXED WITH 'BRICK RED' OXIDE WITH HARD STEEL TROWEL BROOM FINISH IN ACCORDANCE WITH THE MANUFACTURERS SPECIFICATIONS.
9. WHERE APPROVED BY THE ROAD AUTHORITY INSTALL TACTILE GROUND SURFACE INDICATORS IN ACCORDANCE WITH AS1428.4 AND TAMS DESIGN STANDARD DS 13.

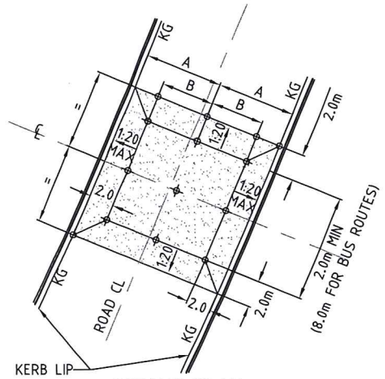

SETOUT PLAN

NOTE

ALL DIMENSIONS SHOWN ARE IN mm UNLESS SHOWN OTHERWISE

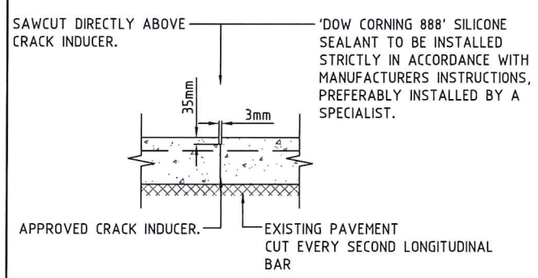

WEAKENED PLANE JOINT DETAIL (WPJ)

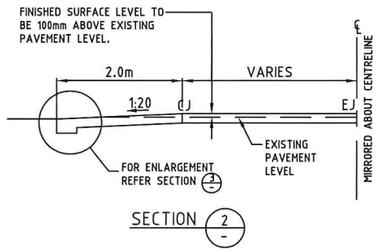

SECTION 2

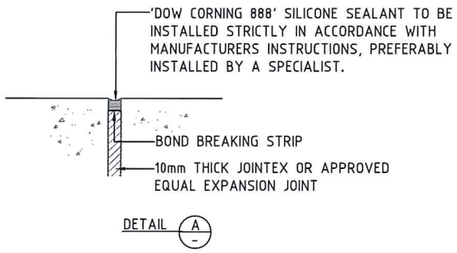

DETAIL A

TYPICAL CONCRETE JOINTS

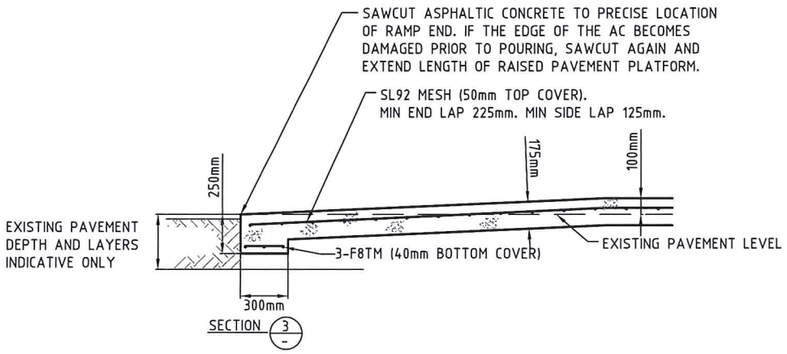

SECTION 3

TYPICAL FLAT TOP SPEED HUMP

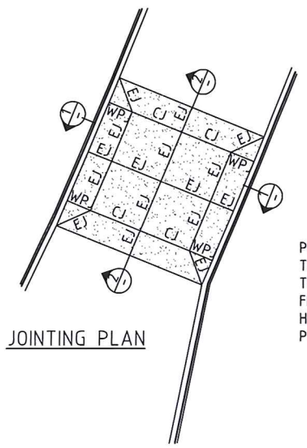

JOINTING PLAN

PLATFORMS IN EXISTING AREAS:
THE CONTRACTOR SHALL TAKE LEVELS AT THE POINTS SHOWN TO ENSURE THAT THE FINISHED PLATFORM LEVEL IS THE CORRECT HEIGHT IN RELATION TO THE EXISTING PAVEMENT

ACT GOVERNMENT

DESIGN STANDARD
URBAN INFRASTRUCTURE

Authorised: DIRECTOR, ROADS ACT TONY GILL	TJG 28/6/11
Drawn: MARTIN GORDON	Date 23/06/2011
Project Engineer: FRED IHEGIE / SNEZANA DIMITROVSKA	Date 23/06/2011

RAISED PAVEMENT PLATFORM TYPICAL DETAILS

Scale NTS	Date 23 JUNE 2011
AutoCAD File DS9-26.DWG	
Latest Revision Details A DS9 UPDATE	
Drawing No. DS9-26	Revision A